# PARTS DIAGRAM & PARTS LIST

## POWERDRIVE - 45/50/55/70 LBS THRUST - 12/24 VOLT - 48”/54”/60” SHAFT

The parts diagram and parts list provides Minn Kota® WEEE compliance disassembly instructions. For more information about where you should dispose of your waste equipment for recycling and recovery and/or your European Union member state requirements, please contact your dealer or distributor from which your product was purchased. Tools required, but not limited to: flat head screwdriver, Phillips screwdriver, socket set, pliers, wire cutters.

**POWERDRIVE CONTROL HEAD**

### Control Head Parts Diagram

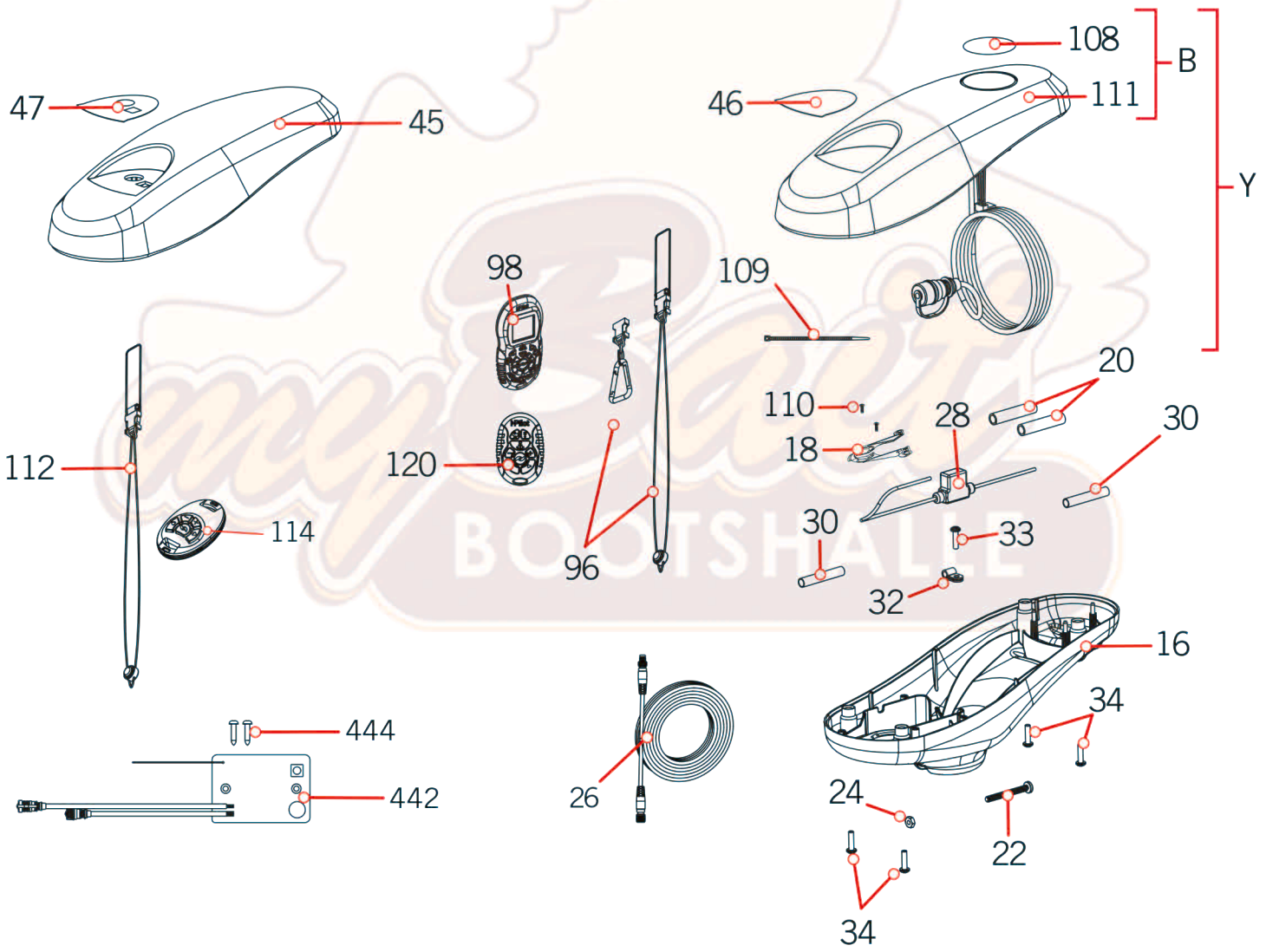



©2019 Johnson Outdoors Marine Electronics, Inc.

## Control Head Parts List

| Assembly | Part # | Description | Quantity |
|---|---|---|---|
| B | 2770218 ♦ | COVER KIT, iP 1.6 PWRDRIVE POWERDRIVE SERVICE MK LOGO *i-PILOT COVER & DECALS ONLY* | 1 |
| Y | 2774125 ♦ | MOTOR KIT, iPLT 1.6 POWERDRIVE *i-PILOT RECEIVER* | 1 |
| **Item** | **Part #** | **Description** | **Quantity** |
| 16 | 2292505 | CONTROL BOX (PD/AP) | 1 |
| 18 | 2224706 | PLUG, SCREW-DOWN, BLK | 1 |
| 20 | 2065400 | WIRE INSULATOR-LGE 1-3/4,BLUE | 2 |
| 22 | 2383407 | SCREW-#10-24 X 2" PPH ZINC | 1 |
| 24 | 2013110 | NUT-HEX #10-24 UNC-2B (ZCP) | 1 |
| 26 | 2211415 ♦ | CABLE-EXTENSION, PD/AP 110" *iPILOT* | 1 |
| 28 | 2218201 | FUSE HOLDER ASSEMBLY | 1 |
| 30 | 2375400 | SHRINK TUBE-1/40D X 1-3/4 | 2 |
| 32 | 2052510 ♦ | CABLE CLAMP, 3/16", NYLON *iPILOT* | 1 |
| 33 | 2012100 ♦ | SCREW-#8-18 X 5/8 THD CUT*Z/P | 1 |
| 34 | 2372100 | SCREW-#8-18 X 5/8 THD* (SS) | 4 |
| | 2012100 | SCREW-#8-18 X 5/8 THD CUT*Z/P | 4 |
| 45 | 2290217 | CVR, CTRL BOX, V3 PRINTED | 1 |
| 46 | 2315603 ♦ | DECAL-PUSH BTN TOP,PD V3 70 iP *70LB THRUST* | 1 |
| | 2395552 ♦ | DECAL,PUSH BTN TOP PD/iP 55 *55LB THRUST | 1 |
| | 2315730 ♦ | DECAL-GENERIC, PUSH BTN TOP FW *45LB THRUST* | 1 |
| 47 | 2315623 | DECAL-COVER, 70 POWERDRIVE *70LB THRUST* | 1 |
| | 2315619 | DECAL-COVER, 50 POWERDRIVE *50LB THRUST* | 1 |
| | 2315621 | DECAL-COVER, 55 POWERDRIVE *55LB THRUST* | 1 |
| | 2315618 | DECAL-COVER, 45 POWERDRIVE *45LB THRUST* | 1 |
| | 2315617 | DECAL-COVER, 42 POWERDRIVE *42LB THRUST* | 1 |
| 96 | 2390800 ♦ | LANYARD, REMOTE W/ CARABINER | 1 |
| 98 | 2994075 ♦ | REMOTE ASSY, IPILOT 1.6 | 1 |
| 108 | 2395545 ♦ | DECAL, DOMED IPILOT FW | 1 |
| ▲ | 2317122 | MANUAL-INSTALL GUIDE,PWRDRV BT | 1 |
| ▲ | 2297165 | MANUAL-DISCLAIMER,DWNLOAD INFO | 1 |
| ▲ | 2317120 | MANUAL, POWERDRIVE BT | 1 |
| ▲ | 2397100 ♦ | MANUAL, iPILOT 1.6 | 1 |
| ▲ | 2397106 ♦ | GUIDE-QUICK REFERENCE, iP 1.6 | 1 |
| 109 | 2256300 | TIE WRAP-5.5" BLACK | 1 |
| 110 | 2372103 | SCREW-#6 X .375 PLASTITE SS | 2 |
| 111 | 2290212 ♦ | COVER,CTRL BOX iP, PD PRINTED | 1 |

▲ *Not shown on Parts Diagram.*
✖ *This part is included in an assembly and cannot be ordered individually.*
♦ *Only available with models factory installed with i-Pilot or i-Pilot Link.*
● *Only available with models factory installed with CoPilot.*

©2019 Johnson Outdoors Marine Electronics, Inc.

# PARTS DIAGRAM & PARTS LIST

| Item | Part # | Description | Quantity |
|---|---|---|---|
| ▲ | 2394903 ♦ | QCK REF.GUIDE, iP MICRO RMT BT | 1 |
| 112 | 2390801 ● | LANYARD, REMOTE | 1 |
| 114 | 2774023 ● | TRANS/REC ASM PD CO-PLT FW | 1 |
| 118 | 2994127 | MTR KIT,iP 1.6 PD MICRO RT | 1 |
| 120 | 2994079 ♦ | REMOTE ASY, iP MICRO BLUETOOTH | 1 |
| 442 | 2374092 ● | CTRL BOARD V2 COPILOT REC | 1 |
| 444 | 2373418 ● | SCREW-#8 X 5/8 PPHSMS S/S | 2 |

myBait BOOTSHALLE

▲ *Not shown on Parts Diagram.*
✖ *This part is included in an assembly and cannot be ordered individually.*
♦ *Only available with models factory installed with i-Pilot or i-Pilot Link.*
● *Only available with models factory installed with CoPilot.*


©2019 Johnson Outdoors Marine Electronics, Inc.

## POWERDRIVE MOTOR

# 12 Volt 3.625" Motor Parts Diagram

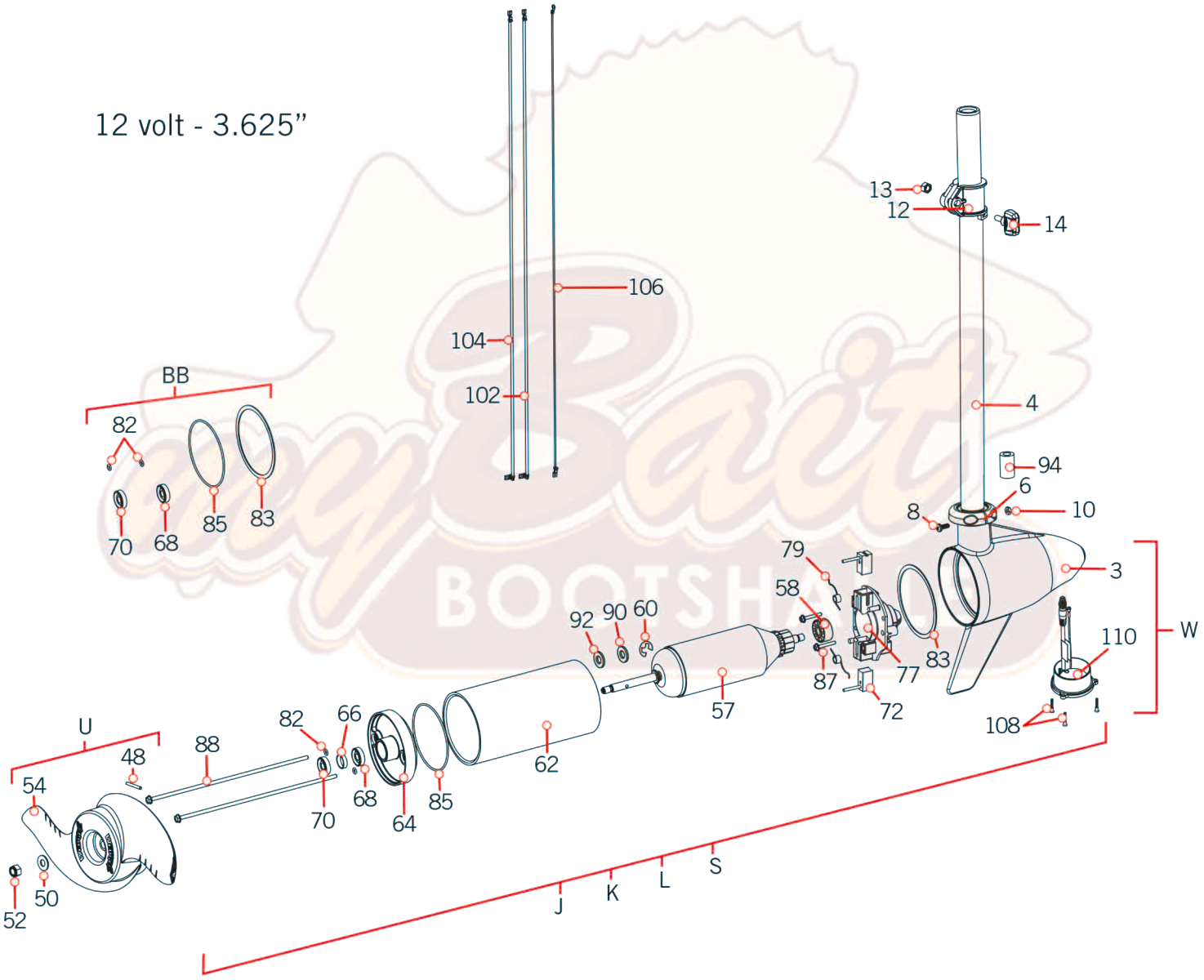



©2019 Johnson Outdoors Marine Electronics, Inc.

## 12 Volt 3.625" Motor Parts List

| Assembly | Part # | Description | Quantity |
|---|---|---|---|
| J | 2097090 | MTR ASY 12V 3.62 VS FW 55# | 1 |
| K | 2107098 | MTR ASY US2.5 12V 3.62" 55# *UNIVERSAL SONAR* | 1 |
| L | 2097072 | MTR ASY 12V 3.62 VS FW 55# *PONTOON* | 1 |
| S | 2097034 | MTR ASY 12V 3.62 VS 50# | 1 |
| U | 1378131 | PROP IND 2091160 (WDLS WDGII) | 1 |
| W | 9421-171 | BRS END HSG/TRANSDUCER ASY 3.6 *54"* *UNIVERSAL SONAR* | 1 |
| BB | 2888460 | SEAL & O-RING KIT | 1 |
| **Item** | **Part #** | **Description** | **Quantity** |
| 3 | 421-065 | HSG BRUSH END 3.625 | 1 |
| | ✖ | BRUSH END HSG 3.625,US2.5 *US2 ONLY* | 1 |
| 4 | 2032076 | TUBE COMPOSITE 54" PD/AP | 1 |
| | 2032075 | TUBE COMPOSITE 48" PD/AP *PONTOON* | 1 |
| 6 | 2301555 | COLLAR-LATCH, PD/AP | 1 |
| 8 | 2303434 | SCREW-#8-32 X 5/8 MACH PHCR SS | 1 |
| 10 | 2303112 | NUT-#8-32 NYLOCK SS | 1 |
| 12 | 2031522 | COLLAR DRIVE (W/INSERT) | 1 |
| 13 | 2013110 | NUT-HEX #10-24 UNC-2B (ZCP) | 1 |
| 14 | 2011365 | SCREW-COLLAR/NEW KNOB | 1 |
| 48 | 2092600 | PIN-DRIVE 1.06" LG (SS) | 1 |
| 50 | 2151726 | WASHER-5/16 STD (S/S) | 1 |
| 52 | 2053101 | NUT-PROP,NYLOC (MED) 5/16 SS | 1 |
| 54 | 2091160 | PROP-WW2 (3.625") REAMED | 1 |
| 57 | 2-100-117A | ARM ASY 12V 3.62 55#2.88" *55LB* *54"* | 1 |
| | 2-100-117 | ARM ASY 12V 3.62 55#2.88" *55LB* *48"* | 1 |
| 58 | 140-010 | BALL BEARING | 1 |
| 60 | 788-015 | RETAINING RING | 1 |
| 62 | 2-200-101A | CTR HSG ASY 3.625 TX-MGNTZ(SUB) | 1 |
| | 2-200-101 | CTR HSG ASY 3.62 TX-MAGNETIZED *PONTOON* | 1 |
| 64 | 2-400-101 | PLAIN END HSG ASY 3.625 *55LB* *48"* | 1 |
| | 2-400-101A | PLAIN END HSG ASY 3.625 *55LB* *54"* | 1 |
| 66 | 144-049 | BEARING - FLANGE (SERVICE ONLY) | 1 |
| 68 | 880-003 | SEAL | 1 |
| 70 | 880-006 | SEAL WITH SHIELD | 1 |
| 72 | 188-036 | BRUSH ASSEMBLY 3.625 | 2 |
| 77 | 738-036 | BRUSH PLATE 3.625 | 1 |

▲ *Not shown on Parts Diagram.*
✖ *This part is included in an assembly and cannot be ordered individually.*
♦ *Only available with models factory installed with i-Pilot or i-Pilot Link.*
● *Only available with models factory installed with CoPilot.*

©2019 Johnson Outdoors Marine Electronics, Inc.

| Item | Part # | Description | Quantity |
|---|---|---|---|
| 79 | 975-040 | SPRING - TORSION 3.625 | 2 |
| 82 | 701-008 | THRU BOLT O-RING | 2 |
| 83 | 337-036 | GASKET | 1 |
| 85 | 701-081 | O-RING | 1 |
| 87 | 830-007 | SCREW, # 8-32 | 2 |
| 88 | 830-042 | THRU BOLT 10-32 X 8.83 | 2 |
| 90 | 990-067 | WASHER - STEEL THRUST | 1 |
| 92 | 990-070 | WASHER - NYLATRON | 1 |
| 94 | 2307314 | BEAD-FERRITE 50LB | 1 |
| | 2307317 | FERRITE BEAD, SHORT *55LB* *54"* | 1 |
| 102 | 640-315 | LEADWIRE BROWN 18 AWG 62" GPT *US2 ONLY* | 1 |
| 104 | 640-107 | LEADWIRE RED 10AWG 65-1/2" GPT 55LB *55LB* *54"* | 1 |
| | 640-109 | LEADWIRE RED 10 AWG 72 GPT 50LB *50LB* *54"* | 1 |
| | 640-105M | LEADWIRE RED 10 AWG 58 GPT *55LB* *48"* | 1 |
| 106 | 640-008 | LEADWIRE BLK 10AWG 63-1/2" GPT 55LB *55LB* *54"* | 1 |
| | 640-010 | LEADWIRE BLK 10 AWG 70 GPT 50LB *50LB* *54"* | 1 |
| | 640-004M | LEADWIRE BLK 10 AWG 56 GPT *55LB* *48"* | 1 |
| 108 | ✖ | SCREW-#6-20 X 1/2 THD CUTS,RIE *US2 ONLY* | 3 |
| 110 | ✖ | TRANSDUCER ASSY 67" GEN2.5 W/T *US2 ONLY* | 1 |

▲ *Not shown on Parts Diagram.*
✖ *This part is included in an assembly and cannot be ordered individually.*
♦ *Only available with models factory installed with i-Pilot or i-Pilot Link.*
● *Only available with models factory installed with CoPilot.*


©2019 Johnson Outdoors Marine Electronics, Inc.

POWERDRIVE STEERING HOUSING

## Steering Housing Parts Diagram

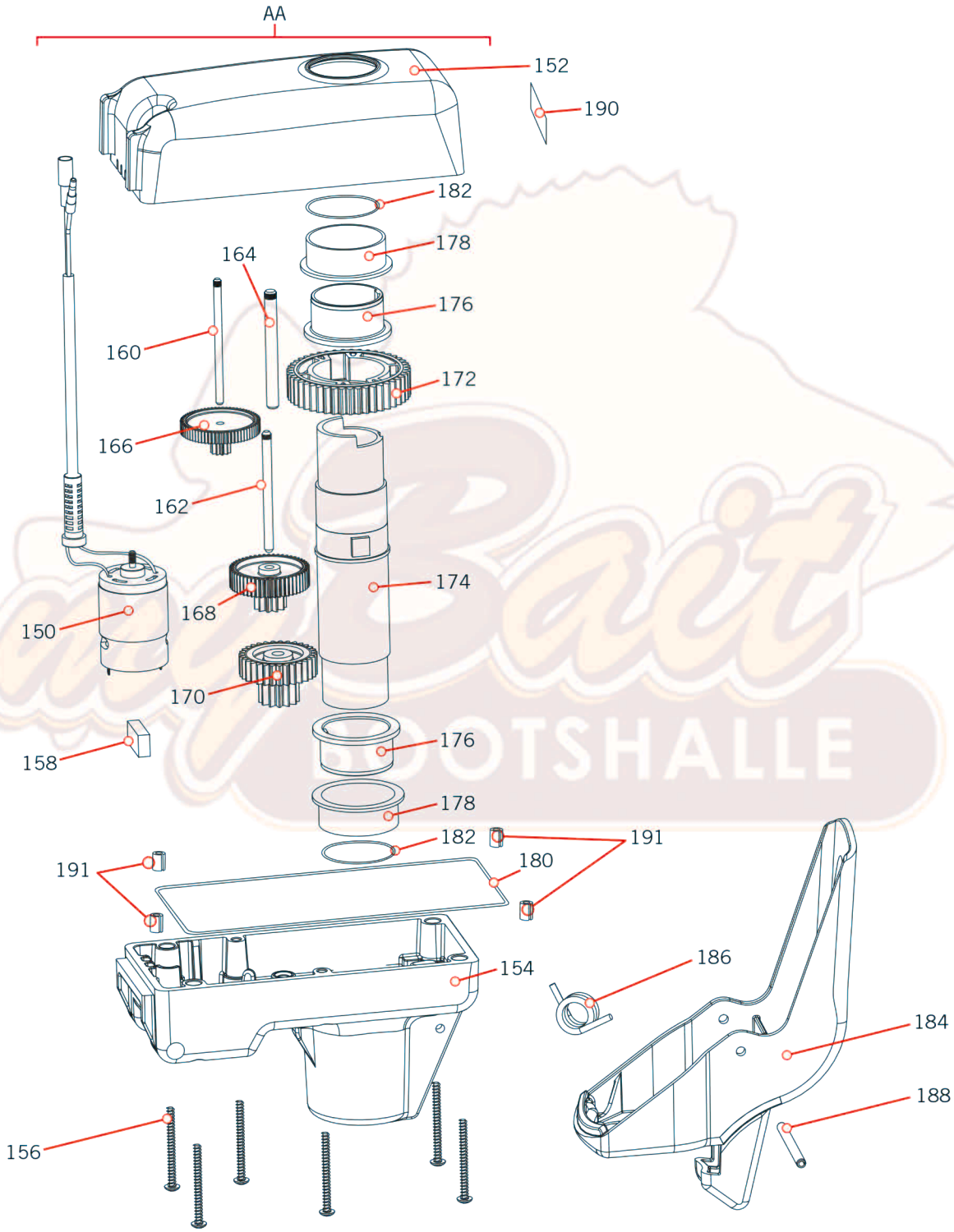



©2019 Johnson Outdoors Marine Electronics, Inc.

## Steering Housing Parts List

| Assembly | Part # | Description | Quantity |
|---|---|---|---|
| AA | 2991836 | DRIVE HOUSING ASSY, PD | 1 |
| **Item** | **Part #** | **Description** | **Quantity** |
| 150 | 2307050 | MOTOR DR.HSG PD/AP 12,24V | 1 |
| 152 | 2302541 | CASE-UPPER,ALUM,FW,PAINTED | 1 |
| 154 | 2302561 | CASE-LOWER, ALUM, FW, PAINTED | 1 |
| 156 | 2303408 | SCREW-#8-32 TYPE F TORX PH SS | 6 |
| 158 | 2308601 | BREATHER FILTER, DR.HOUSING | 1 |
| 160 | 2302610 | SHAFT-GEAR, FIRST CLUSTER | 1 |
| 162 | 2302615 | SHAFT-GEAR,INTERMED.CLUSTER | 1 |
| 164 | 2302620 | SHAFT-GEAR, THIRD CLUSTER | 1 |
| 166 | 2302245 | GEAR & PINION,DR. HSG, STAGE 2 | 1 |
| 168 | 2302250 | GEAR & PINION,DR. HSG, STAGE 3 | 1 |
| 170 | 2302255 | GEAR & PINION,DR. HSG, STAGE 4 | 1 |
| 172 | 2302260 | GEAR-OUTPUT SHAFT,STG 5 | 1 |
| 174 | 2302010 | SHAFT-OUTPUT, DR.HOUSING | 1 |
| 176 | 2307304 | BUSHING-INNER, UPPER/LOWER | 2 |
| 178 | 2307305 | BUSHING-OUTER, UPPER/LOWER | 2 |
| 180 | 2304603 | O-RING-SHAFT SEAL UPPER/LOW | 2 |
| 182 | 2304604 | O-RING-CASE SEAL | 1 |
| 184 | 2307201 | LEVER,GRIP GLIDE II | 1 |
| 186 | 2302750 | SPRING-LATCH,TORSION,PD/AP,S/S | 1 |
| 188 | 2302627 | PIN-ROLL,3/16 X 2.5" ZP | 1 |
| 190 | 2305641 | DECAL - STOW/DEPLOY; POWERDRIVE | 1 |
| 191 | 2302605 | PIN-ROLL 5/16" X 1/2" | 4 |

▲ *Not shown on Parts Diagram.*
✖ *This part is included in an assembly and cannot be ordered individually.*
♦ *Only available with models factory installed with i-Pilot or i-Pilot Link.*
● *Only available with models factory installed with CoPilot.*

©2019 Johnson Outdoors Marine Electronics, Inc.

POWERDRIVE FOOT PEDAL

## Foot Pedal Parts Diagram

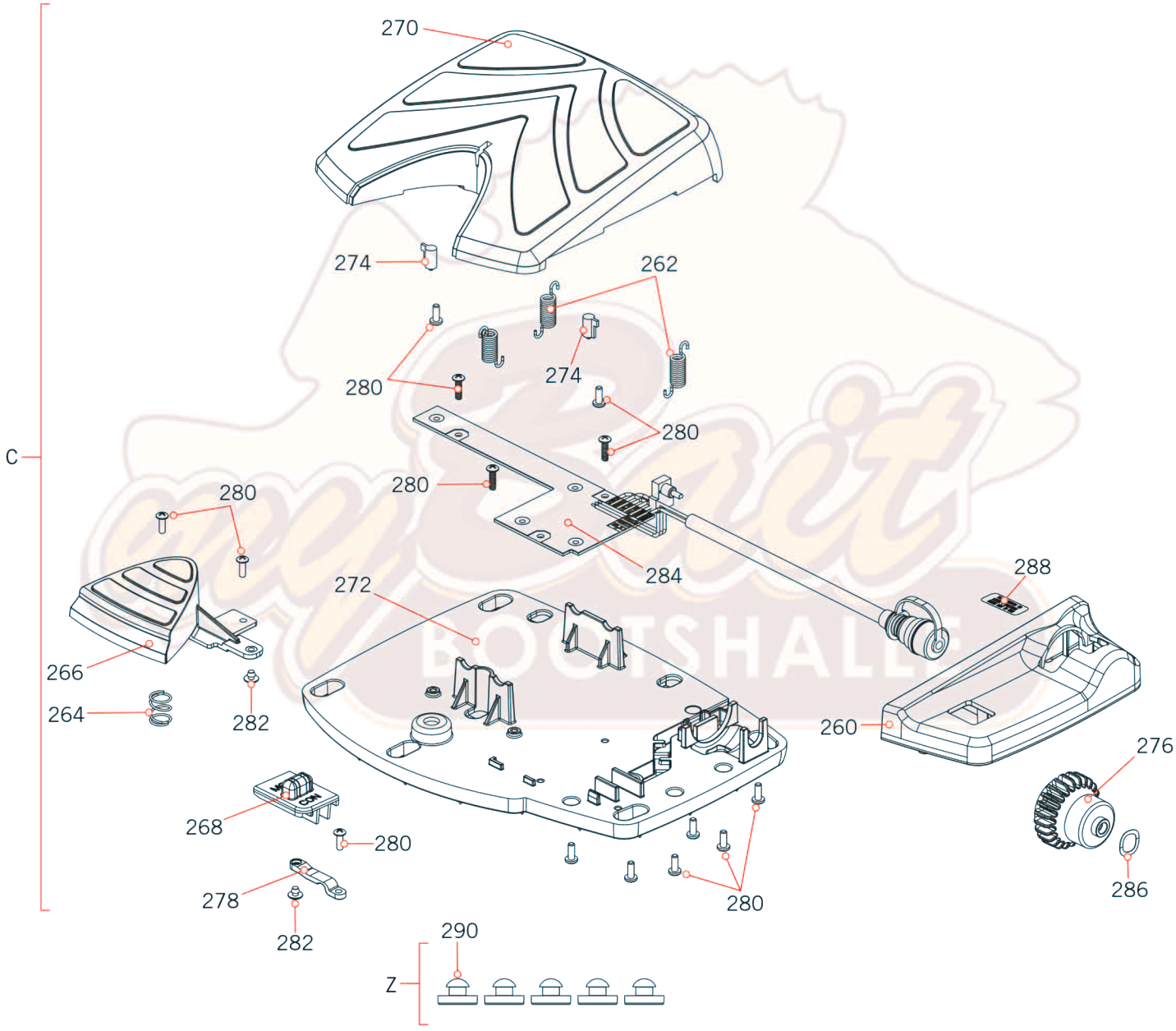



©2019 Johnson Outdoors Marine Electronics, Inc.

## Foot Pedal Parts List

| Assembly | Part # | Description | Quantity |
|---|---|---|---|
| C | 2994728 | FOOT PEDAL ASSEMBLY, PD | 1 |
| Z | 2994859 | BAG ASY-TERROVA/V2,RUB.BUMPERS | 1 |
| **Item** | **Part #** | **Description** | **Quantity** |
| 260 | 2300275 | COVER-SPEED SELECTOR,PD FP,BLK | 1 |
| 262 | 2302730 | SPRING-LONG-UPPER PEDAL | 3 |
| 264 | 2302732 | SPRING-LOWER PEDAL S/S | 1 |
| 266 | 2303725 | BUTTON-MOMENTARY, PD FP, BLK | 1 |
| 268 | 2303730 | BUTTON-MOM/CON, PD FP, BLK | 1 |
| 270 | 2304406 | PEDAL, STRG ROCKER, PD FP, BLK | 1 |
| 272 | 2304508 | BASE, PEDAL PD | 1 |
| 274 | 2305136 | BUMPER,STRG RCKR,PD FP,RUBBER | 2 |
| 276 | 2307905 | WHEEL-SPEED, PD FP, BLK | 1 |
| 278 | 2308609 | SWITCH LEVER, SINGLE | 1 |
| 280 | 2302105 | SCREW #6-19 X 3/8 HIGH-LOW SS | 14 |
| 282 | 2335130 | BUMBER ACTUATOR | 2 |
| 284 | 2994053 | PCB/CTRL CORD, PD FT PEDAL | 1 |
| 286 | 2301750 | WASHER, WAVE, PD V3 FP | 1 |
| 288 | 2316600 | DECAL-ON/OFF SWITCH/PD V2 PED | 1 |
| 290 | 2325110 | PAD, FOOT PEDAL PD | 5 |

▲ *Not shown on Parts Diagram.*
✖ *This part is included in an assembly and cannot be ordered individually.*
♦ *Only available with models factory installed with i-Pilot or i-Pilot Link.*
● *Only available with models factory installed with CoPilot.*

©2019 Johnson Outdoors Marine Electronics, Inc.

POWERDRIVE MOUNT

## Mount Parts Diagram

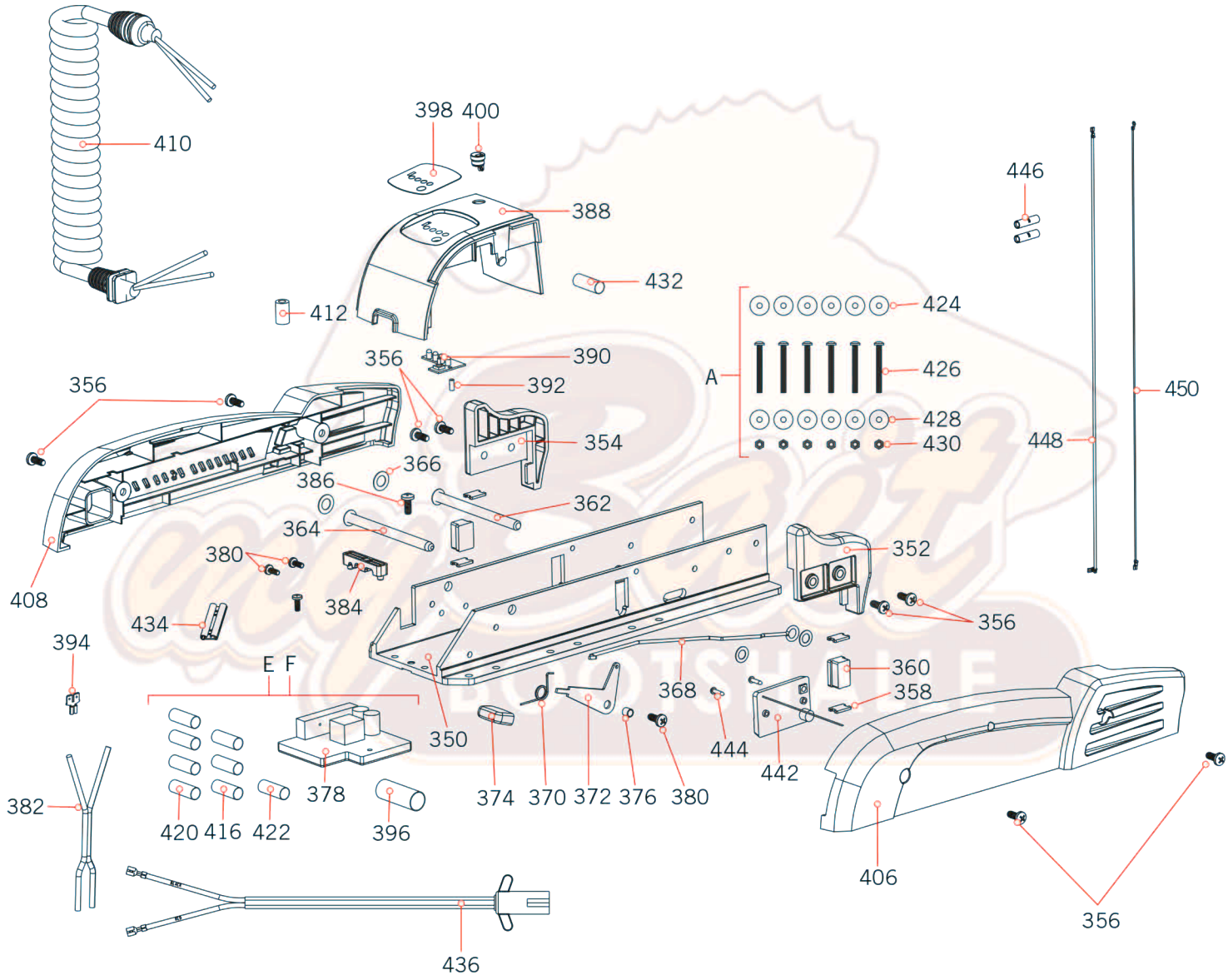



©2019 Johnson Outdoors Marine Electronics, Inc.

## Mount Parts List

| Assembly | Part # | Description | Quantity |
|---|---|---|---|
| A | 2994864 | BAG ASSEMBLY - (BOLT, NUT, WASHERS) | 1 |
| E | 2884055 | CONTROL BRD-12V V2 W/O AP W/SHRNK | 1 |
| F | 2884056 | CONTROL BRD-24V V2 W/O AP W/SHRNK | 1 |
| **Item** | **Part #** | **Description** | **Quantity** |
| 350 | 2301936 | EXTRUSION BASE PD V2 | 1 |
| 352 | 2303932 | MOTOR REST-RIGHT, 3 5/8" *70LB* *50LB* *55LB* | 1 |
| | 2303930 | MOTOR REST-RIGHT, 3 1/4" *42LB* *45LB* | 1 |
| 354 | 2303937 | MOTOR REST-LEFT, 3 5/8" *70LB* *50LB* *55LB* | 1 |
| | 2303935 | MOTOR REST-LEFT, 3 1/4" *42LB* *45LB* | 1 |
| 356 | 2303430 | SCREW-1/4-20 X 5/8-SELFTAP ZP | 9 |
| 358 | 2305110 | PAD-PIVOT SUPT ZINC | 4 |
| 360 | 2305103 | PIVOT PAD,559 FB DUROMETER 90A | 2 |
| 362 | 2300500 | PIN-LATCH | 1 |
| 364 | 2300510 | PIN-PIVOT | 1 |
| 366 | 2013100 | NUT-SPEED | 4 |
| 368 | 2303612 | ROD-RELEASE (RT/AP) S/S | 1 |
| 370 | 2322700 | SPRING-TORSION | 1 |
| 372 | 2303710 | LEVER-RELEASE | 1 |
| 374 | 2300101 | RELEASE-KNOB | 1 |
| 376 | 2301700 | SPACER-RELEASE LEVER-BRASS | 1 |
| 378 | 2304064 | CONTROL BRD-12V V2 W/O AP *42LB 54"* *45LB 48"* *50LB 54"* *55LB 54"* *55LB 48"* *PONTOON* *55LB 54" COPILOT* *COPILOT* *55LB 54" US2* *UNIVERSAL SONAR* | 1 |
| | 2304065 | CONTROL BRD-24V V2 W/O AP *70LB 60"* *70LB 48"* *PONTOON* *70LB 60" US2* *UNIVERSAL SONAR* | 1 |
| | 2304067 | CONTROL BOARD-24V V2 W/AP *70LB 54" i-PILOT* *70LB 60" i-PILOT* | 1 |
| | 2304066 | CONTROL BOARD-12V V2 W/AP *54"* *45LB 54" i-PILOT* *55LB 54" i-PILOT* | 1 |
| 380 | 2303434 | SCREW-#8-32 X 5/8 MACH PHCR SS | 3 |
| 382 | 2090651 | LEADWIRE,10 GA *70LB* | 1 |
| 384 | 2321310 | STRAIN RELIEF | 1 |
| 386 | 2323405 | SCREW-1/4-20 X 1/2" MCH SS | 1 |
| 388 | 2306570 | HOUSING-CENTER, POWERDRIVE | 1 |
| 390 | 2074071 | BATTERY METER, 24V *70LB* | 1 |
| | 2074070 | BATTERY METER, 12V *55LB* *42LB* *45LB* | 1 |
| 392 | 2383428 | SCREW-#4-24 X 5/8 HI-LO SS | 1 |
| 394 | 2320710 | TERMINAL-AMP (T-TAB) | 1 |
| 396 | 2325401 | SHRINK TUBE-3/4 ID X 2" W/ADHS | 1 |

▲ *Not shown on Parts Diagram.*
✖ *This part is included in an assembly and cannot be ordered individually.*
♦ *Only available with models factory installed with i-Pilot or i-Pilot Link.*
● *Only available with models factory installed with CoPilot.*

©2019 Johnson Outdoors Marine Electronics, Inc.

| Item | Part # | Description | Quantity |
|---|---|---|---|
| 398 | 2305643 | DECAL-BATTERY METER PD V2 FW | 1 |
| 400 | 2302935 | STRAIN RELIEF-DR. HOUSING | 1 |
| 406 | 2303980 | SIDEPLATE-RIGHT PD MK | 1 |
| 408 | 2303985 | SIDEPLATE-LEFT PD MK | 1 |
| 410 | 2991284 | COIL CORD W/STRAIN RLF,PD 60" *60" 70LB *iPILOT* | 1 |
| | 2991280 | COIL CRD W/STRN RLF, PD 48"/54" *48" 45LB* *54" 45LB* *54" 42LB* | 1 |
| | 2991283 | COIL CORD W/STRN RLF, PD 48"/54" *48" 70LB* *iPILOT* *54" 70LB* | 1 |
| 412 | 2307313 | BEAD-FERRITE | 1 |
| 420 | 2305401 | SHRINK TUBE-.374 ID X 1.5" | 4 |
| 416 | 2305410 | SHRINK TUBE-.315 OD X 2.25" | 3 |
| 422 | 2305415 | SHRINK TUBE-.472 ID X 2.25" | 1 |
| 424 | 2263462 | SCREW-1/4-20 X 2" S/S PPH ADJT | 6 |
| 426 | 2261713 | WASHER-1/4 FLAT 18-8 SS | 6 |
| 428 | 2263103 | NUT-1/4-20 NYLOCK SS | 6 |
| 430 | 2301720 | WASHER-MOUNTING - RUBBER | 6 |
| 432 | 2375400 | SHRINK TUBE-1/40D X 1-3/4 | 1 |
| 434 | 2320715 | ADAPTER-TAB .25 F-F | 1 |
| 436 | 2266730 | LEADWIRE W/PLUG,12/24V,PD,TRKR | 1 |
| 442 | 2374092 ● | CTRL BOARD V2 COPILOT REC(SUB) | 1 |
| 444 | 2373418 ● | SCREW-#8 X 5/8 PPHSMS S/S | 2 |
| 446 | 2030710 | CONNECTOR BUTT *42LB 54"* | 2 |
| 448 | 2030317 | WIRE EXTENSION-18"-RED *42LB 54"* | 1 |
| 450 | 2030316 | WIRE EXTENSION-18"-BLACK *42LB 54"* | 1 |

▲ *Not shown on Parts Diagram.*
✖ *This part is included in an assembly and cannot be ordered individually.*
♦ *Only available with models factory installed with i-Pilot or i-Pilot Link.*
● *Only available with models factory installed with CoPilot.*


©2019 Johnson Outdoors Marine Electronics, Inc.